NRSM Series
Wire Wound SMD Power Inductor
Size 252012

FEATUERS

-
-
-

APPLICATION

-
-

Dimensions: [mm]

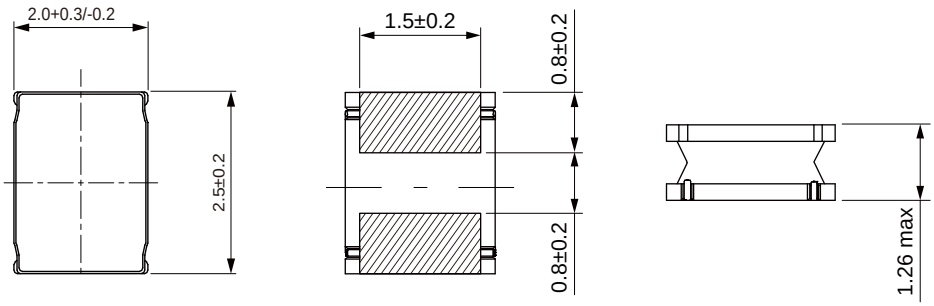

Land Pattern: [mm]

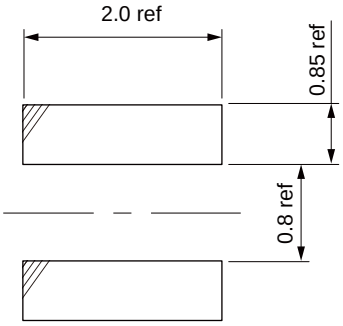

Electrical Properties:

Part No		Tolerance	Temperature Rise Current Typ. (A)	Satura on Current Typ. (A)	DC Resistance Typ. (Ω)	DC Resistance Max. (Ω)

Temperature rise current: the actual value of DC current when the temperature rise is ΔT40℃
Saturation Current that will cause initial inductance to drop approximately 30%

KOHER Electronic
4546 BATES DRIVE, YORBLINDA CA 92886 USA
714-325-4789 Contact@kohergroup.com

KOHER Electronic
4546 BATES DRIVE, YORBLINDA CA 92886 USA
714-325-4789 Contact@kohergroup.com